Pipe-Seal
Installation Manual

For inner sealing sleeves in accessible pipelines,

nominal diameters DN 6 - 32 (Pipe-Seal-Fix and Pipe-Seal-End)

and nominal diameters DN 8 - 24 (Pipe-Seal-Flex)

- General information
- Preparing the installation positions
- Installation of the Pipe-Seal inner seal
- Technical data

ATTENTION

Before starting the installation and removal, carefully read all instructions!

Before starting the installation and removal, the pipeline system must be depressurized and emptied!

Put on personal protective equipment, safety goggles, head protection and safety shoes.

Non-observance of instructions and information in the installation manual could result in malfunctions/defects of the product and system, whereby, injury to persons and/or tangible damage could occur.

If additional installation instructions are required, or there are questions about the product, contact Pipetronics GmbH & Co. KG:

www.pipetronics.com
phone: +49 209 38 655-200
fax: +49 209 38 655-219

Table of Content

1. Introduction

Dear user and design engineer,

we are glad to welcome you as a user of our Pipe-Seal product range. Based on your existing know-how in the field of pipe rehabilitation we are convinced that with the aid of these instructions the application and the installation of our Pipe-Seal products will be quite easy.

This manual will be a guideline for you throughout the whole mounting procedure and you herewith dispose of all the experience we have gained so far.

We shall always be ready to respond to individual requests. And we shall just as well help you with words and deeds, if you need us at building sites.

Good luck!

Best regards

Your Pipetronics-Team

1.1 Contact and locations

Pipetronics GmbH & Co. KG
Stutensee
Development & Parts production
Helmholtzstr. 1d
D-76297 Stutensee
tel. +49 7244 94 993-0

Branch Rhein-Ruhr
Production Seals
Uechtingstr. 74
D-45881 Gelsenkirchen
tel. +49 209 38 655-200

Branch Rheda-Wiedenbrück
Vehicle extension & Generator construction
Nickelstr. 26
D-33378 Rheda-Wiedenbrück
tel. +49 5242 183 899-0

Branch Nuremberg
Vehicle construction, Robot installation & Central warehouse
Fischbachstr. 10
D-90552 Röthenbach a.d.Pegnitz
tel. +49 911 477 192-0

Dübendorf
Pipetronics Swiss AG
Alte Landstr. 12
CH-8600 Dübendorf bei Zürich
tel. +41 44 8 22 22-00

Managing Directors
Mr. Markus Brechwald
Mr. Markus Lämmerhirt

Sales Department
Mrs. Julia Kaulfersch
tel.: +49 209 38 655-200
fax: +49 209 38 655-219

Application Engineers
Mr. Daniel Schlehahn
mob.: +49 151 146 091-43
fax: +49 209 38 655 -219

Mr. Detlef Oeser
tel.: +49 209 38 655-204
fax: +49 209 38 655-219

2. General information and details

For the sake of clarity and to avoid faults, we ask you to carefully read these instructions before you start installing our Pipe-Seal products.

On delivery and before the use of our Pipe-Seal products we ask you to check the received goods as to their sound condition. We regret, but later complaints cannot be considered. Please check the completeness and the operational readiness of the necessary tools and the fitting aids before installation. We shall gladly provide you with the appropriate tools and fitting aids as well as a number of useful adaptors and fittings.

When you do not observe these instructions resp. different points thereof, malfunctions and/or defects may occur on our Pipe-Seal products and on the mounting system, which may lead to damage on persons and material.

The present instructions do not raise claim to completeness. For tips and suggestions please contact us under:

Pipetronics GmbH & Co. KG
Branch Rhein-Ruhr
Uechtingstr. 74
D-45881 Gelsenkirchen
tel. +49 209 38 655-200
fax +49 209 38 655-219
seals@pipetronics.com

3. Details: Occupational health and safety and accident prevention

We remind that the currently valid directives concerning the occupational health and safety and the accident prevention must be absolutely followed!

We basically point out that

- When mounting the Pipe-Seal products and when starting the mounting pressure, the shaft area must be left.
- Protective glasses and ear muffs must be worn.
- The filling devices (hose; compressor, accessory equipment) must be checked for operational liability before use.
- Wearing the personal protective equipment is a basic requirement for carrying out construction work.

The following general requirements must be observed before installing Pipe-Seal products:

- Before mounting Pipe-Seal products the areas to be rehabilitated must be kept clear of e.g.:
    - Pressure
    - Fouling
    - Flow media

4. Pipe-Seal system

4.1 System

Our Pipe-Seal products Pipe-Seal-Fix und Pipe-Seal-End are suitable for the repair of pipelines with dimensions from DN 150 to DN 800 and Pipe-Seal-Flex for dimensions from DN 200 to DN 400.

It is a mounting system made of stainless steel V4A and a compression seal of EPDM, which is mechanically and continuously adjustable in the corresponding dimensions and areas of application. The damage repair takes place by a permanent contact pressure of the respective stainless steel sleeve in connection with an EPDM rubber seal to the existing pipe wall.

Our Pipe-Seal products -Fix and -End comprise each on both sides a strip with a single tooth row produced by die cutting.

Our Pipe-Seal product -Flex respectively comprises on both sides a strip with a double tooth row produced by die cutting.

In connection with our patented locking system the tooth row locks when expanding according to the existing local conditions and ensures that the setting and contact pressure durably persists.

In order to be able to mount a stainless steel sleeve in an existing pipe to be rehabilitated, this sleeve is prepared (rolled up) during the production with a smaller nominal diameter, which allows an easy carrying of the stainless steel sleeve to its place of installation.

This transport usually takes place with packer systems, which are expanded by means of compressed air and which simultaneously mount the carried stainless steel sleeve in relation to its system limits (dimensions; areas of application). During this procedure the existing tooth row passes through the patented locking system, which is only moving in one direction.

4.2 Storage and transport

To guarantee the high quality of our products, imperatively watch that storage and transport of the stainless steel sleeves is corrosion-free. That means it must be absolutely avoided that they get into touch with base metals.

Furthermore we point out that our precision products are to be secured during transport. Securing is necessary to avoid e.g. violent pressures and deformation resulting thereof.

4.3 Rules and standards

Our Pipe-Seal products are subject to the following rules and standards:

1. DIN EN 13508-2 „Measures for repairing locally limited damage“
2. Data sheet DWA-M 143-5 „Rehabilitation of drainage systems outside buildings”; Part 5: Repair of sewer pipes and conduits with internal sealing collars
3. DIN EN 681-1 Elastomer seals – Material requirements for pipe seals applied in the water supply and the drainage
4. Stainless steels – Part 1: List of stainless steels; German version EN 10088-1:2014

Our Pipe-Seal products were approved for the nominal widths DN 200 to DN 800:

1. DIBt-approval No. Z-42.3-521 – Internal pipe seals called Pipe-Seal for buried sewage pipes with the nominal width DN 200 to DN 800.
2. High-pressure flushing safety according to DIN 19 523 – Requirements and test procedures for detecting the high-pressure jet and flushing resistance of pipe sections for sewer pipes and conduits.
3. Test of the hydrogen identity of the elastomer sealants acc. to ASTM D5576.
4. Proof of the stability of the steel quality in relation to wastewater acc. to DIN 1986-3.
5. Test of the water tightness acc. to DIN EN 1610 – Installation and testing of sewage pipes and conduits for internal and external pressure of 0.5 bar.
6. Test of the water tightness under heavy load exposure. Deformation and angular offset acc. to DIN 4060 – Pipe connections of wastewater conduits and pipelines with elastomer seals – Requirements and tests on pipe connections with elastomer seals.
7. Elastomer guideline of the Federal Environment Office.

5 Overview Pipe-Seal products

5.1 Pipe-Seal-Fix

Figure 1: Pipe-Seal-Fix without EPDM rubber seal

5.1.1 Execution

Supplied product range (see enclosed data sheet).

- Dimensions from DN 150 to DN 800
- Construction length:
  - Dimension DN 150 Construction length 300 mm
    - Rubber seal B=286 mm
  - Dimension DN 188 to DN 560 Construction length 420 mm
    - Rubber seal B=500 mm
  - Dimension DN 600 bis DN 800 Construction length 500 mm
    - Rubber seal B=590 mm
- Flanging
  - Without
    - Predominantly serial displacement
    - Also possible in single displacement according to local requirements
  - One side
    - Single displacement with flanging opposed to the direction of flow
    - Serial displacement as end sleeve with flanging opposed to the direction of flow
  - Two sides
    - Single displacement with flushing safety on both sides

5.2 Pipe-Seal-End

Figure 2: Pipe-Seal-End without EPDM rubber seal

5.2.1 Execution

Supplied product range (see enclosed data sheet).

- Dimensions from DN 150 to DN 800
- Construction length:
    - Dimension DN 150 to DN 500 Construction length 250 mm
    - Dimension DN 600 to DN 800 Construction length 300 mm
    - Rubber seal B=195 mm for DN 150 - DN 500
    - Rubber seal B=225 mm as from DN 600
    - Flanging
        - In general on both sides

5.3 Pipe-Seal-Flex

Figure 3: Pipe-Seal-Fix without EPDM rubber seal and without guide plate

5.3.1 Execution

Supplied product range (see enclosed data sheet).

- Dimensions from DN 200 to DN 400
- Construction length:
  - Dimension DN 200 to DN 400 construction length 420 mm
  - Rubber seal B=500 mm
  - Appropriate for the use at angular displacements up to 25 mm and / or angular offsets up to 10°
  - Displaceable also in combination with Pipe-Seal-Fix
- Flanging
  - Without
    - Predominantly serial displacement
    - Also possible in single displacement according to the local requirements. In this case corresponding delivery periods must be considered respectively asked for.
  - One side
    - On the customer's request delivered with one-sided flanging. In this case corresponding delivery periods must be considered.
  - Two sides
    - Single displacement with flushing safety on both sides

5.4 Custom-made products

On your request we also make special designs.

5.5 Technical explanations

5.5.1 Technical details

5.5.1.1 Locking mechanism

The locking mechanism is a new concept and consists of the following component parts:

1. Lock
2. Tooth row

The advantage of the Pipe-Seal products is that, thanks to the patented locking system, the sleeves can be conically expanded in determined limits.

The lock is made of two toothed wheels which are arranged such that the sleeve can only be expanded in one direction and in the opposite direction the locking mechanism automatically locks.

The locking system is fixed to the sleeve by a very flat holding-down plate (see the following figures).

Because of different technical requirements the Pipe-Seal-Flex sleeve has a tooth row on two sides and accordingly also a two-sided locking mechanism.

Locking mechanism system

Tooth row on one side:

Tooth row on two sides:

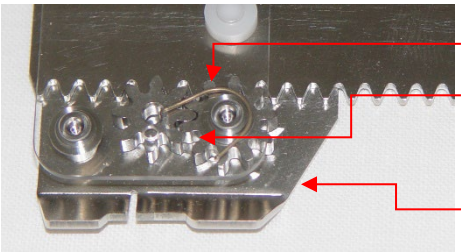

Figure 4: Pipe-Seal-Fix/LEM
Locking system with tooth row on one side

Toothed strips

Toothed wheels
(locking system)

Holding down plate

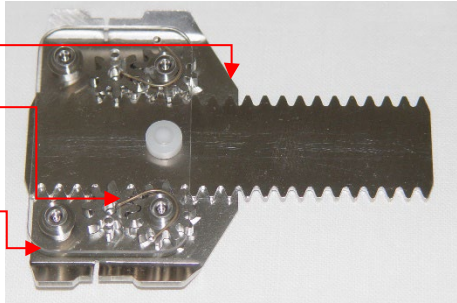

Figure 5: Pipe-Seal-Flex
Locking system with tooth row on two sides

Figure 7: Pipe-Seal-Fix/LEM
tooth row on one side

Toothed
strips

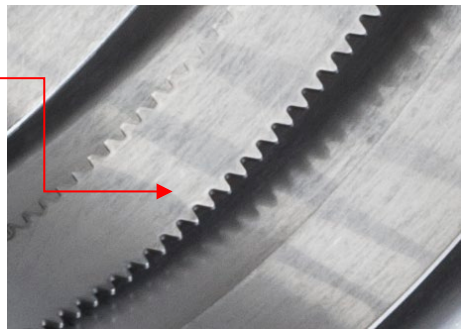

Figure 6: Pipe-Seal-Flex
tooth row on two sides

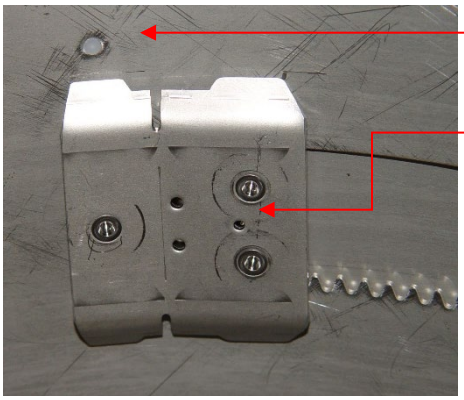

Figure 9: Pipe-Seal-Fix/LEM
holding down plate

Transport locks

Holding down plate

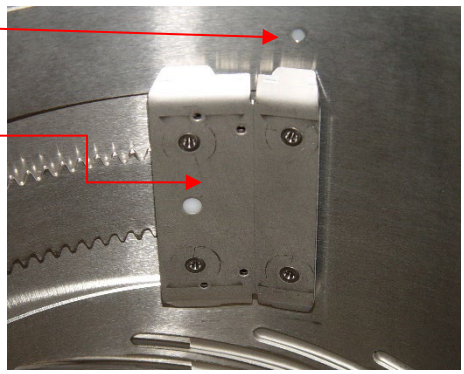

Figure 8: Pipe-Seal-Flex
tooth row on two sides

5.5.1.2 Mode of operation locking mechanism

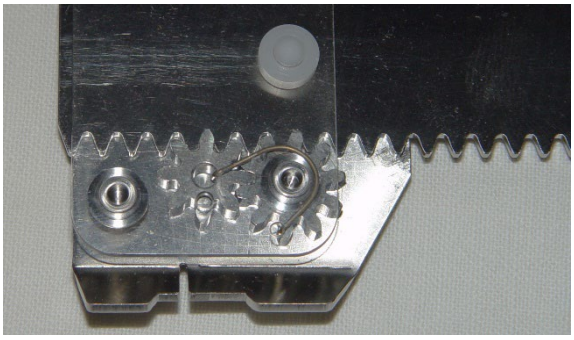

Figure 10: Pipe-Seal Lock – direction of travel tooth row

5.5.1.3 Used materials

5.5.1.3.1 Steel

Stainless steel V4A quality 1.4571 / 1.4404 is used for the sleeve. This corrosion-resistant stainless steel is appropriate for the use in municipal wastewaters. Other fields of application must be checked before.

5.5.1.3.2 Rubber seal

A seal of EPDM is most appropriate for municipal wastewaters. The material is resistant to many acids and bases, but not to mineral oils. The temperature resistance lies between -20.0 °C and 140.0°C.
An NBR seal is characterized by its high resistance to oils, greases, carbon hydrides, favorable aging qualities and good mechanical properties.

5.5.1.3.3 Fields of application Pipe-Seal-Fix / (-Flex)

Our Pipe-Seal products are suitable for the following defects:

1. Pipe outbreaks resp. shard formation
    - Please mind that protruding broken fragments, e.g. obstructions must previously be eliminated.

Figure 11: Pipe outbreak

2. Cracks
   a. Longitudinal cracks
   b. Radial cracks
   c. Crack formation
      - Please mind that before rehabilitation the defect is carefully examined in order to avoid a widening of the crack during installation

Figure 12: Crack formation

3. Leaks as well as leaky pipe connections
   a. Groundwater intrusion (infiltration)
      - Please consider the range of approval of our Pipe-Seal products, especially concerning the groundwater level above the bottom.
   b. Escaping flow medium (wastewater exfiltration)
      - Preparing measures may become necessary.

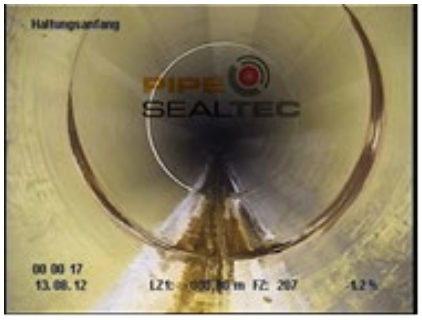

Figure 13: Leaky pipe connection

4. Deviations in position of pipe connections
   a. Change of direction
   b. Formation of misalignment
      - Please mind that this is a classical field of application of our Pipe-Seal-Flex (watch the dimensions).
      - In other cases, preparing measures may be necessary.

Figure 14: Axial change of direction

5. Closing of unused laterals
   - Preparing measures may become necessary.

Figure 15: Protruding connection piece

   - Please watch as well the carrying out of laterals, e.g. as to the number of Pipe-Seal products to be used.

Figure 16: Branch adaptor

6. Outbreaks, material wear, corrosion
   - We recommend a previous sound examination of the defect as to the ease of installation resp. application of our Pipe-Seal products:

   a. Degree of corrosion (sealing effect)

Figure 17: Concrete corrosion

   b. Intruding obstructions

Figure 18: Penetrating roots

   - Here preparing measures may become necessary.

7. Intruding obstructions
   a. e.g. roots
      - Here preparing may become necessary.

Figure 19: Penetrating roots

In case of a single installation the following damage length can be covered:

- DN 150 max. approx. 200 mm
- DN 200 - DN 560 max. approx. 300 mm
- DN 600 - DN 800 max. approx. 390 mm

There is no problem to cover misalignments up to max. 2.0 cm and/or angular offsets up to 10.0° with our Pipe-Seal-Flex in dimensions between DN 200 and DN 400.

In order to cover large damaged areas our Pipe-Seal products can be placed in series with an appropriate overlapping.

Here it is also possible to combine both product groups – Pipe-Seal-Fix and Pipe-Seal-Flex according to the previously mentioned general requirements.

5.5.1.3.4 Fields of application Pipe-Seal-End

Our Pipe-Seal-End sleeve is a durable and tight connection of liner systems which are completely cured and free of stress.

Figure 20: Liner connections with Pipe-Seal-End

The Pipe-Seal-End sleeve is on the one hand used as a seal between liner and old pipe and on the other hand as a shaft connection. With this sleeve you obtain a pressure-resistant end sealing between shaft structure, old pipe and liner system.

In fringe areas the Pipe-Seal-End sleeve is able to seal eccentrically mounted liners, as it can be conically widened (see also 5.5.1.1 Locking mechanism).

6 Installation „Step by Step“ – Pipe-Seal-Fix and -Flex

6.1 Preparing the areas to be worked

6.1.1 Step 1 – Cleaning and inspecting

The area (reach) intended to be rehabilitated must be cleaned as required and protected against a new fouling before the installation of a Pipe-Seal product.

Please take care that with the used cleaning devices the actual damage to be eliminated by the Pipe-Seal products will not even be increased.

It may be necessary to take additional preparing measures, such as e.g.:

- Milling
- Surface levelling in case of serious corrosion
- Or similar
- See also 6.1.2 Step 2 – Preparation

After the cleaning procedure the area intended to be rehabilitated must be visually inspected and the actual state must be documented and it must be verified whether the rehabilitation with Pipe-Seal products is possible.

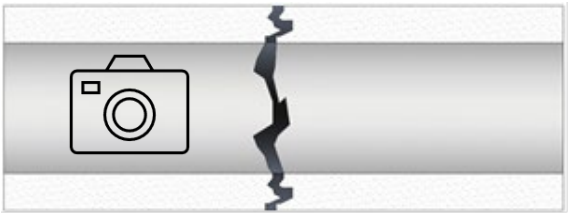

Figure 21: Damage documentation

An adaptation of the planned rehabilitation to the actual local conditions may be necessary. Based on the results of the visual examination the appropriate mode of performance must be chosen, as e.g.:

- Single mounting of
  - Pipe-Seal-Fix or
  - Pipe-Seal-Flex
    - With flanging (1 side/2 sides or without)

- In case of serial displacement
  - Pipe-Seal-Fix or
  - Pipe-Seal-Flex
    - With flanging (1 side or without)
    - Please consider the technical parameters of our products.

- Combination
  - Pipe-Seal-Fix and/or
  - Pipe-Seal-Flex
    - With flanging (1 side/2sides or without)
    - Please consider the technical parameters of our products.

Most important when preparing the repair is the knowledge of the local conditions.

NOTE!

Please true and test the rolled-up sizes with the mounting openings resp. the possibilities of access prior to performing the rehabilitation.

Here we show an example concerning the required mounting space:

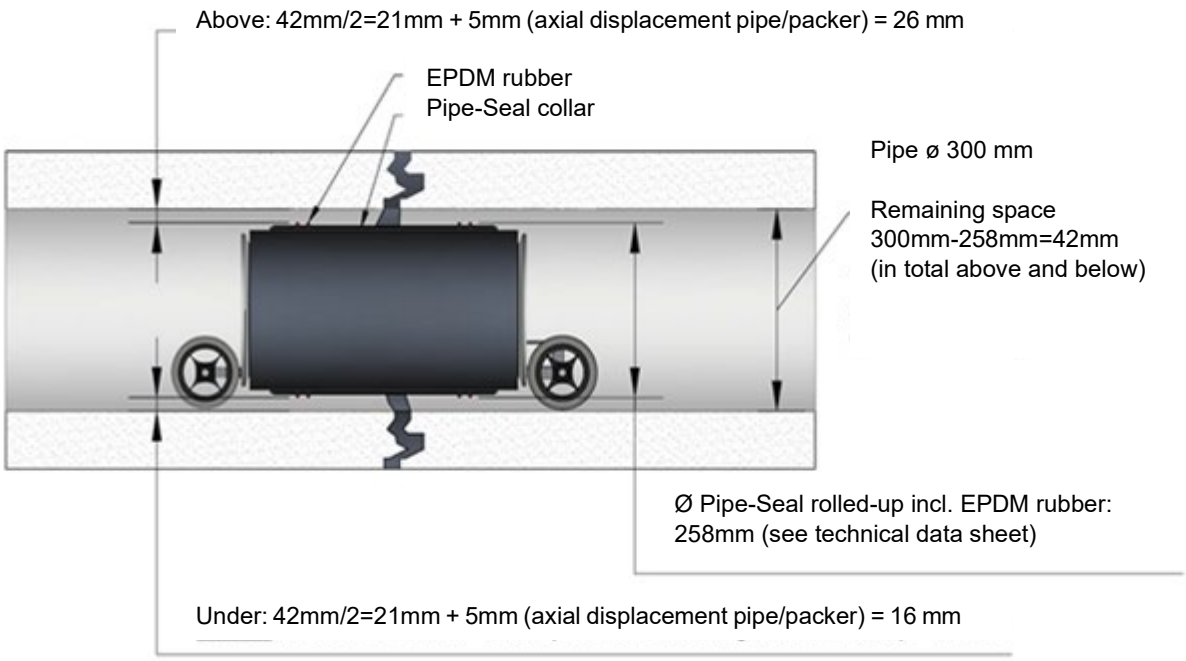

Position axis mounting device to pipe axis:

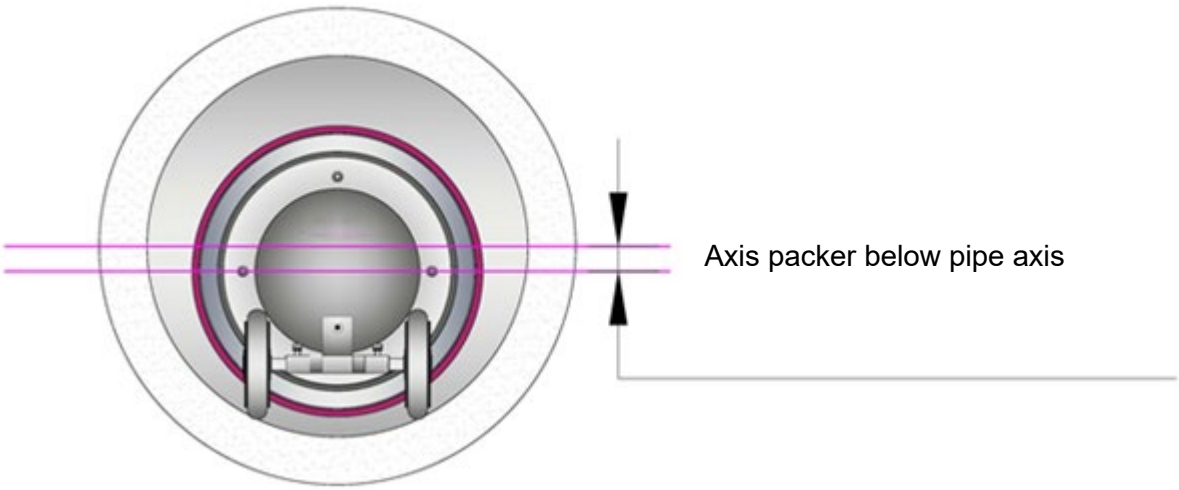

6.1.2 Step 2 – Preparation

The area to be rehabilitated must be prepared so that

- the camera-packer system via connecting rod

Figure 22: Mounting system TV-unit / displacement packer and connecting rod

- or the robot-packer system

Figure 23: Mounting system Robot unit / displacement packer and robot adaptor

including the respective Pipe-Seal product can be positioned without restraints.

At least one access possibility via the revision openings or shaft openings must be guaranteed (previously watch dimensions and/or conditions to be determined) in order to ensure the use of the respective mounting system.

Here particular attention is to be paid to the following factors:

1. Dimension shaft openings (shape and dimensions)

Figure 24: Dimension shaft opening

2. Shaft shape (free cross-section)

Figure 25: Ensure free work area

3. Channel profile and pipe connection

Figure 26: Forming of access possibilities such as channel profile and pipe connection

4. Existing situation

Figure 27: Misalignment

5. Fouling

Figure 28: Shaft fouling

Figure 29: Pipe fouling

All the factors impairing the mounting of sleeves must be eliminated beforehand.

See also 6.1.1 Step 1 – Cleaning and inspecting and 6.5.1 Fields of application.

6.2 Applicable products

6.2.1 Step 3 – Pipe-Seal products and accessories

6.2.1.1 Devices, equipment

We recommend the following devices, tools resp. items of equipment:

1. Mounting systems according to the own equipment which are adjusted to the dimensions individually to be worked (see also 6.1.2 Step 2 – Preparation).
   a. Pipe-Seal products (Fix/Flex/End)

Figure 30: Pipe-Seal-Fix without EPDM rubber seal

Figure 31: Pipe-Seal-Flex without EPDM rubber seal

Figure 32: Pipe-Seal-End without EPDM rubber seal

b. EPDM rubber

Figure 33: Pipe-Seal EPDM rubber seal (different models for Fix / Flex / End)

c. Packer

Figure 34: Displacement packer

d. Packer coupling system (see also 6.1.2 Step 2 – Preparation)
- Mounting system Robot unit / displacement packer and robot adaptor
- Mounting system TV unit / displacement packer and connecting rod

e. Adaptor robot system

Figure 35: Adaptor VP to KATE (manufactor Pipetronics)

f. Accessories connecting rod

Figure 36: Connecting rod

g. Set of wheels for packer for the respective dimensions

Figure 37: Wheel set Pipetronics

h. Connecting rod

Figure 38: Connecting rod

i. Adaptor connecting rod

Figure 39: Adaptor connecting rod

j. Talcum

Figure 40: Talcum (example)

k. Sharp knife

Figure 41: Cutter knife

l. Superglue

Figure 42: Superglue (example)

m. Manometer with hose connection

Figure 43: Manometer

n. Compressed air hose with an adequate length

o. Oil (biodegradable and not dissolving rubber)

6.3 Preparing the Pipe-Seal products

6.3.1 Step 4 – Preparing the Pipe-Seal-Fix products

1. Receipt of goods

a. All the delivered products must be checked as to possible damage before the application!

2. The adhesive strips for securing the position are to be cut out with an appropriate tool (see Figure 41: Cutter knife) (advisable approx. 0.5cm min.) as shown in the following figure.

3. In the lock area and in the metal sheet overlap the respective Pipetronics products must be oiled (cf. Oil (biodegradable and not dissolving rubber)).

Figure 44: Cutting transport safety

4. EPDM rubber

a. Before slipping the EPDM rubber over the respective Pipetronics products it must be powdered with talcum. So slipping over is much easier and the friction between rubber and sleeve is reduced.

Figure 45: Talc-powdered rubber

Figure 46: Powder rubber seal with talcum

b. Slipping over the EPDM rubber

Note: Sleeves flanged on one side allow an easier slipping over of the rubber on the non-flanged side

Figure 47: Slipping over of the rubber

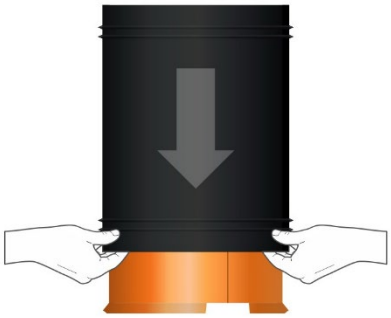

Figure 48: Adequately slip-over rubber seal

c. Cutting the existing overlap

For cutting the rubber please use a sharp knife or industrial scissors in order to obtain a clean cut.

Figure 49: Simple cut of overlapping rubber

Figure 50: Circumferential cut of overlapping rubber

The rubber seal must be cut in a way that the distance between the rubber and the sleeve border is between 0.5 cm and 1.0 cm

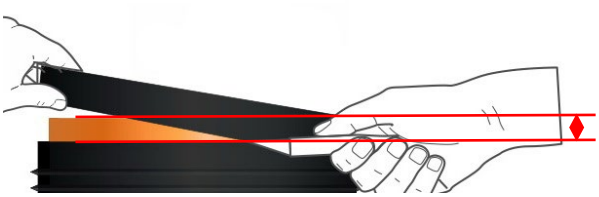

Figure 51: Exact cutting of rubber overlap

Sizing: Distance rubber – sleeve border min. 0.5 cm - 1.0 cm

Then the rubber seal must be centered on the sleeve.

d. Fixing the EPDM rubber on the respective Pipetronics product. This is to secure the fit of the EPDM rubber up to the place of installation without changing its position on the sleeve. For this purpose the EPDM rubber is fixed with superglue as shown in the figure, ideally at both ends of the sleeve, respectively opposite.

Please take care that no glue comes between the metal sheet overlap and/ or the locking mechanism, otherwise the expansion of the sleeve is prevented!

Figure 52: Application of glue

Generally the sealing effect in single mountings is in the area between the two-sided sealing knob pairs.

- In case of a single mounting the rubber overlap must always be removed – as mentioned before.
- In case of a serial mounting the existing rubber overlap must absolutely be maintained and not be cut.

5. Positioning and fixing on mounting device
   a. Positioning the Pipe-Seal sleeve on the displacement packer

Figure 53: Positioning the prepared stainless steel sleeve on the packer

Position the Pipe-Seal sleeve incl. rubber on the packer such that the locking mechanism is on the crown after the later widening.

In order to ensure this, the lock must be positioned at 11 o'clock resp. 13 0'clock in the direction of flow when loading the mounting system.

In case a Pipe-Seal sleeve with a flange on one side is used, so the flanging must generally be positioned and mounted opposite the direction of flow.

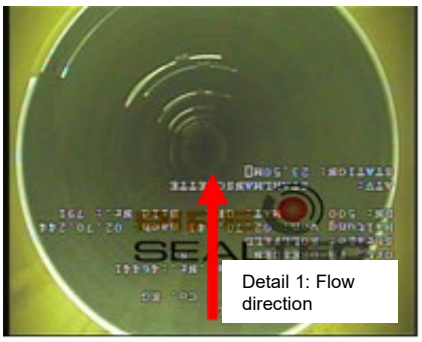

Figure 54: Arrangement flanging

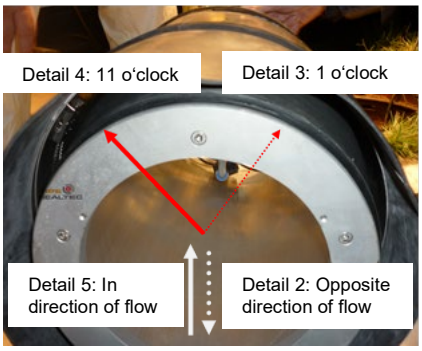

Figure 55: Adjustment of locking mechanism

Pipe-Seal sleeve has to be positioned on the mounting device (packer) in a way that a continuous TV supervision of the mounting procedure is guaranteed.

Figure 56: Arrangement TV supervision

b. Fixing the Pipe-Seal sleeve on the mounting device (packer).

The Pipe-Seal sleeve must be fixed with a contact pressure of max. 0.5 bar on the mounting device (packer) before entering into the area to be worked.

Figure 57: Fixing by mounting pressure

Detail 6: Pressure for receiving/fixing the Pipe-Seal sleeve on the mounting device (packer) approx. 0.5 bar

The above described positioning of the Pipe-Seal sleeve on the mounting device ensures

- the serviceability of the rehabilitation product,
- an improvement of the later operability,
- the avoidance of flow obstacles.

6.4 Mounting the Pipe-Seal products

6.4.1 Step 5 – Mounting Pipe-Seal-Fix

a. Entering the Pipe-Seal sleeve to the place of installation in the sewer

Drive the mounting system with the Pipe-Seal sleeve to the damaged spot. Please check the damaged area for the suitability of rehabilitation with the Pipe-Seal sleeve and document this.

Figure 58: Access to place of installation in sewer

b. Positioning at the damaged spot

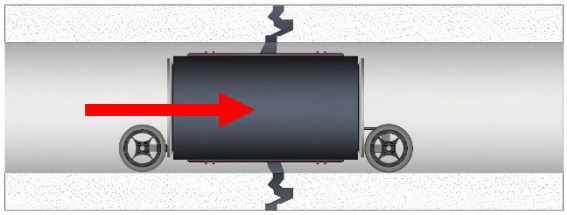

Figure 59: Entering to the damaged spot

Position the Pipe-Seal sleeve so that the damaged spot is between the sealing knobs.

c. Expansion at the damaged spot

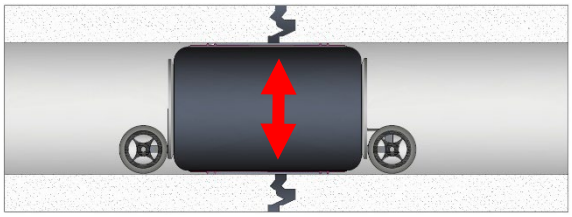

Figure 60: Expansion at the damaged spot

Impinge the packer with an air pressure of approx. 2.0 bar of and expand the sleeve.

Now provide the packer, according to the enclosed table, with the required air pressure, so that the Pipe-Seal sleeve entirely fits to the old pipe. Then relieve the packer (pressure relief). Position the packer in the middle at the respective locks and repeat the above described procedure.

The above described procedure guarantees that the Pipe-Seal sleeve ideally fits to the old pipe and the existing rubber seal reaches the required compression and hence the seal effect is achieved.

d. Pressure relief at the packer

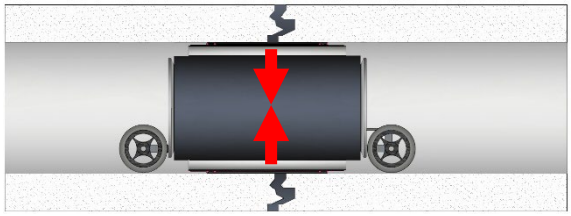

Figure 61: Pressure relief completed before removing the packer

Relieve the packer (pressure relief) after the expanding procedure.

e. Remove the packer

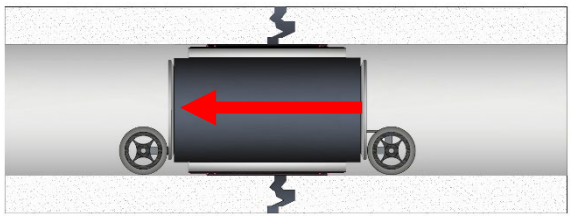

Figure 62: Remove the packer

Then remove the packer from the rehabilitation area.

f. Document the rehabilitated damaged spot

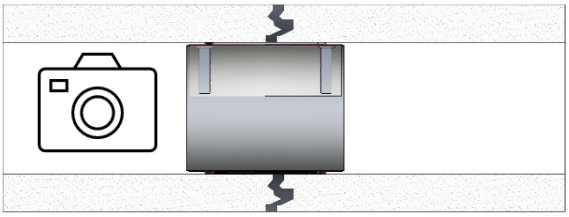

Figure 63: Damaged area rehabilitated by means of Pipe-Seal seal – Documentation

Please document the successful rehabilitation after installation!

6.4.2 Step 5 – Mounting Pipe-Seal-Fix with one-sided flanging

a. Bringing the Pipe-Seal sleeve to the place of installation in the sewer
See point 6.4.1 Step 5 – Mounting Pipe-Seal-Fix analogously applies to Pipe-Seal-Fix without resp. with flanging on one resp. two sides.

When preparing and mounting the Pipe-Seal-sleeve with a flanging on one side, please take care that the flanging is positioned against the direction of flow!

Figure 64: Position of flanging to flow direction

Detail 7: Flanging one side

Detail 8: Flow direction

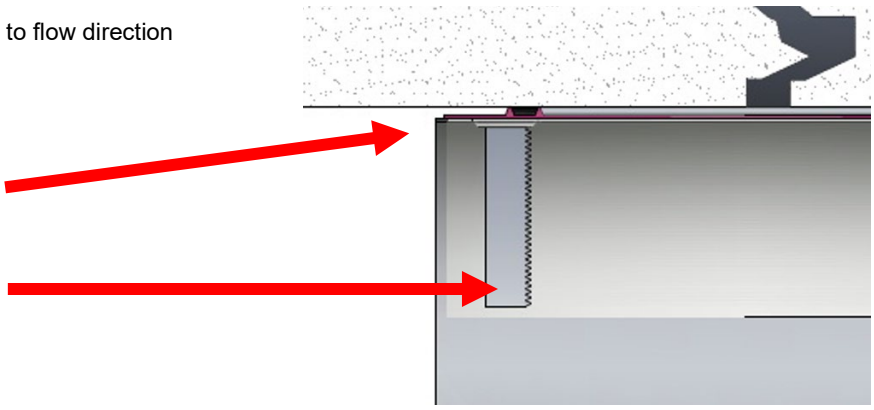

b. Positioning at the damaged spot

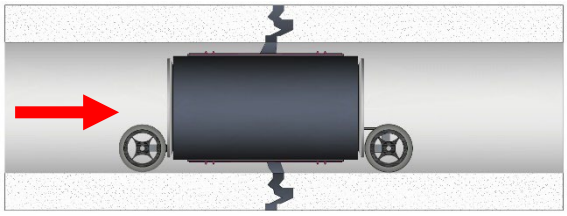

Figure 65: Driving to the damaged spot

Position the Pipe-Seal sleeve in a way that the damaged spot is between the sealing knobs.

c. Expansion at the damaged spot

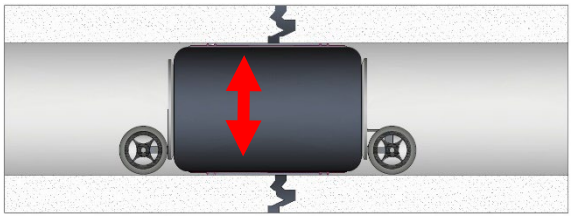

Figure 66: Expansion at damaged spot

Impinge the packer with an air pressure of approx. 2.0 bar of and expand the sleeve.

Now provide the packer, according to the enclosed table, with the required air pressure so that the Pipe-Seal sleeve entirely fits to the old pipe.

Then relieve the packer (pressure relief). Position the packer in the middle at the respective locks and repeat the above described procedure.

The above described procedure guarantees that the Pipe-Seal sleeve ideally fits to the old pipe and the existing rubber seal reaches the required compression and hence the seal effect is achieved.

d. Pressure relief at the packer

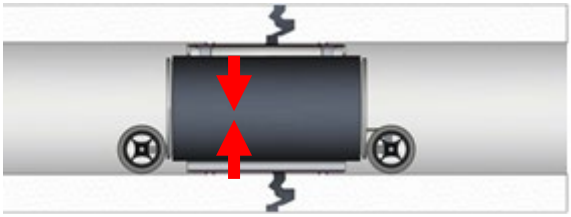

Figure 67: Pressure relief completed before removing the packer

Relieve the packer (pressure relief) after the expanding procedure.

e. Remove the packer

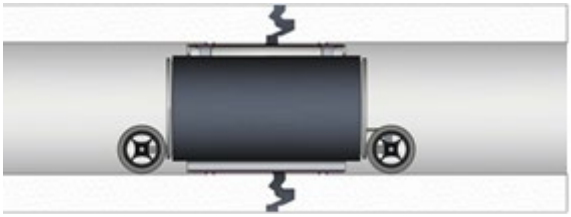

Figure 68: Remove packer

Then remove the packer from the rehabilitation area.

f. Document the damaged spot

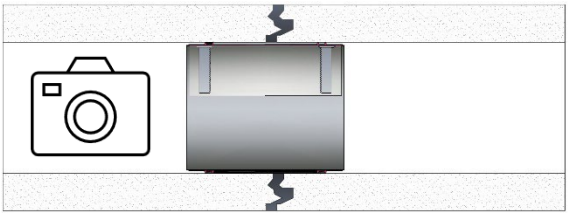

Figure 69: Damaged area rehabilitated with Pipe-Seal sleeve - Documentation

Please document the successful rehabilitation after mounting!

6.4.3 Step 5 – Mounting Pipe-Seal-Fix in serial displacement

The mounting in serial displacement is applied in case of extended damage. Here the extent of the damage to be rehabilitated must be determined and assessed prior to mounting. Pipe-Seal sleeves with a one-sided flanging or without flanging are used.

When planning the installation/rehabilitation the following basic rules must be observed:

1. The mounting always takes place from the low point against the direction of flow.

2. The sealing area is (area between the pairs of sealing knobs) must be placed in a way that a distance of at least 15 cm of the respective sealing knob will remain at the beginning and at the end of the area to be rehabilitated (complete damage coverage).

3. The rubber overlap serves as an overlapping of the sealing areas in serial displacement.The last rubbers must always be accordingly shortened. That means the last Pipe-Seal sleeve is mounted without rubber overlap against the direction of flow (ideally with a one-sided flanging).

4. As in case of serial displacement smaller offsets occur, caused by the thickness of the material of the sleeves, not being however an obstacle to the flow, the mounting takes place against the flow direction.

5. Please consider that in case of longitudinal cracks (see 5.5.1.3.3 Fields of application Pipe-Seal-Fix / (-Flex)) it is generally necessary to rehabilitate the complete length of pipe from collar to collar in order to prevent a further crack formation.

6. Please do also check beforehand whether the overlapping areas caused by a serial mounting and the thus produced reduction in cross-section of approx. 2 - 4 mm still allows a mounting in small dimensions of old pipes.

   a. See 6.1.1 Step 1 – Cleaning and inspecting

   b. Damage documentation - After cleaning the area intended for rehabilitation must be visually inspected, the actual state must be documented and it must be verified whether the rehabilitation is possible with Pipe-Seal products.

Figure 70: Damage documentation

Detail 9: Flow direction

When preparing and mounting please take care that you begin with the damaged spot being at the end in the direction of flow.
Analogous 6.4.1 Step 5 – Mounting Pipe-Seal-Fix

   c. Mounting order resp. procedure of Pipe-Seal sleeves
   - Begin in the direction of flow with the damage end

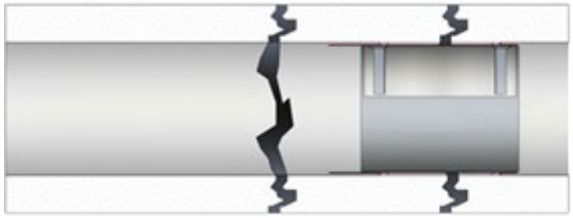

Figure 71: Mounting order Pipe-Seal sleeve with EPDM rubber and rubber overlap

d. EPDM rubber overlap of the Pipe-Seal sleeves

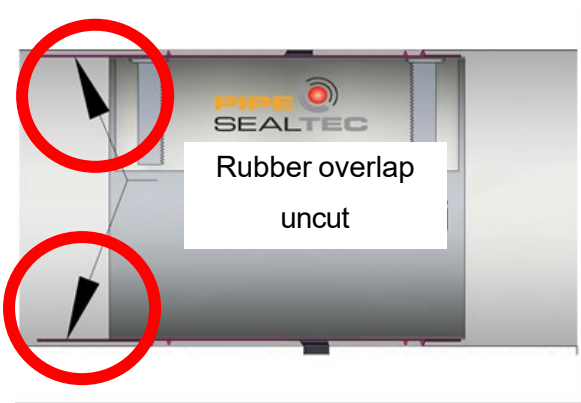

Figure 72: Pipe-Seal sleeve with EPDM rubber uncut

Detail 10: Flow direction

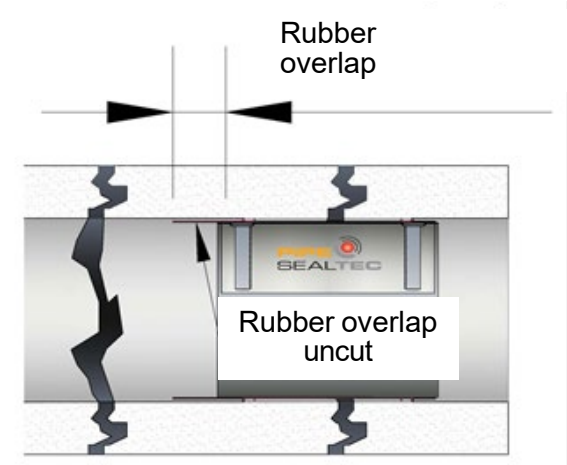

Figure 73: EPDM rubber overlap

e. Positioning and overlapping of another Pipe-Seal sleeve at the damaged spot

Figure 74: Mounting direction of another sleeve in a serial mounting

When positioning another Pipe-Seal sleeve, this must be mounted against the flow direction (see former figure), i.e. through the already mounted sleeves.

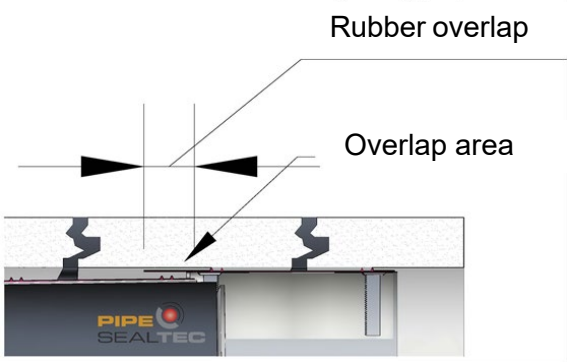

Figure 75: Positioning another Pipe-Seal sleeve

Please take special care that the preparation is correctly executed (see 6.2.1.1 Devices, equipment, here 1 l superglue, as well as 6.3.1 Step 4 – Preparing the Pipe-Seal-Fix products, here 4.d fixing), in order to avoid that the Pipe-Seal sleeve changes in place on the mounting device when positioned later on at the place of installation, and thus being no longer mountable.

- Drive the next Pipe-Seal sleeve through the already mounted one up to approx. 0.5 cm behind the last lock (sleeve rim to lock position).

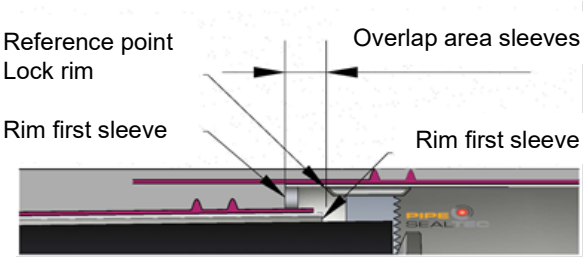

Figure 76: Positioning of Pipe-Seal sleeve in overlap area

Please take care that the rubber overlap of the first sleeve does not slide on and that the next sleeve will not be placed on the lock in the overlap area.

- In case the rubber overlap has slid on, please drive completely back through the existing sleeve, so that the rubber overlap can again raise and start the above described procedure right from the beginning.

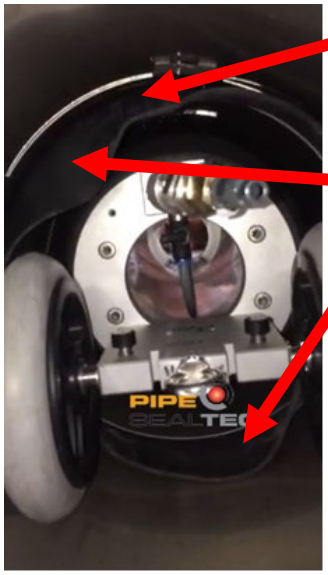

Detail 11: Overlap area

Detail 12: Slipped-on rubber, Sleeve not mountable

Figure 77: Serial displacement

Example picture to aforementioned point 2.

- The rubber overlap is the basis for a complete connection of the respectively following Pipe-Seal sleeves and so a closed, sealing system is produced in serial displacement.

- The mounting of the end sleeve with a one-sided flanging is carried out as described above. (See 6.4.2 Step 5 – Mounting Pipe-Seal-Fix with one-sided flanging).

f. Expansion at the place of installation

Figure 78: Expansion at the place of installation – Mounting the end sleeve

Impinge the displacement packer with an air pressure of approx. 2.0 bar of and expand the sleeve.

Now bring, according to the enclosed table, the required air pressure on the packer, so that the Pipe-Seal sleeve entirely fits to the old pipe and the already mounted sleeve.

Then relieve the packer (pressure relief). Position the packer in the middle at the respective locks and repeat the previously described procedure.

The previously described procedure guarantees that the Pipe-Seal sleeve ideally fits to the existing pipe and the existent rubber seal reaches the required compression and hence the seal effect.

g. Pressure relief at packer

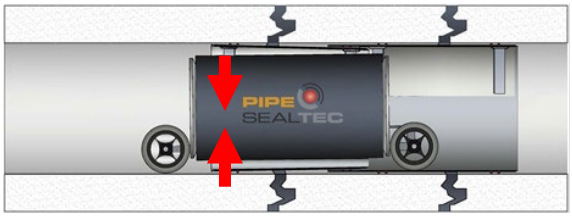

Figure 79: Pressure relief competed before removing the packer

Relieve the packer after the expanding procedure (pressure relief).

h. Remove packer

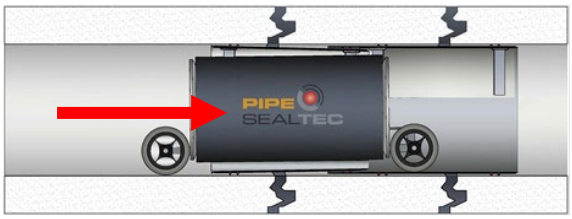

Figure 80: Remove the packer

Then remove the packer from the rehabilitation area.

i. Document the rehabilitated damaged spot

Detail 13: Flow direction

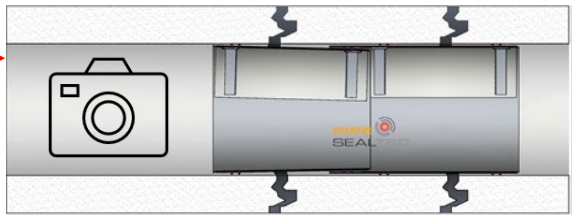

Figure 81: Damaged area rehabilitated with Pipe-Seal sleeves - Documentation

Please document the successful rehabilitation after the installation!

Figure 82: Documented rehabilitation area Pipe-Seal sleeves Serial mounting

6.5 Radial offsets and axial changes of direction – Pipe-Seal-Flex System

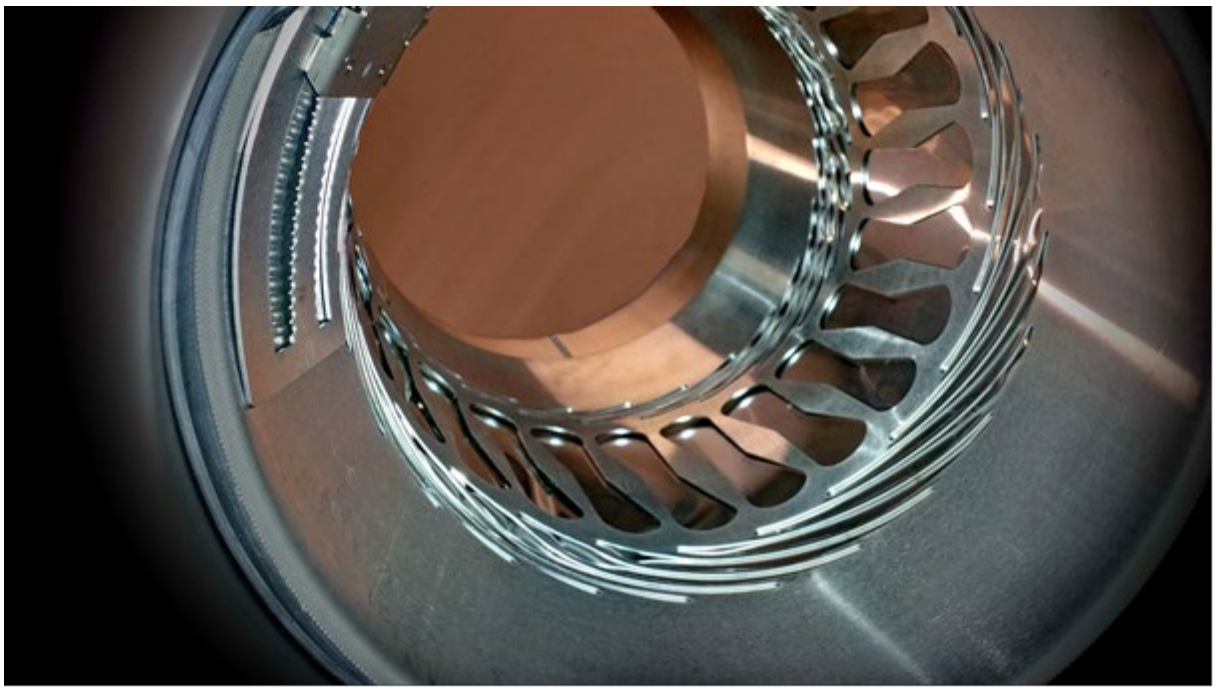

Figure 83: Pipe-Seal-Flex mounted in case of misalignment and angular offset

6.5.1 Fields of application

During daily work you have certainly had situations where the previously described Pipe-Seal products have reached the limits of feasibility.

For this purpose we have developed a sleeve which is able to rehabilitate angular offsets (bends) **and/ or** misalignments **without** any further preparation work.

The stainless steel sleeve Pipe-Seal-Flex

With this you are able to work resp. rehabilitate e.g. socket misalignments up to approx. 2.0 cm and / or angular offsets (bends) up to approx. 10° of the pipe axis.

This novel sleeve is flexible, can be conically expanded in certain areas and hence ideally adjusts itself to the existing sewer and damage situation.

Figure 84: Pipe-Seal-Flex (here without guide plate)

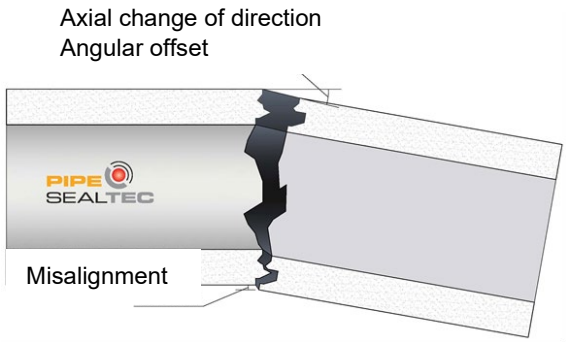

Figure 85: Schematic presentation of the fields of application

Figure 86: Test set-up axial and radial change of direction (angular offset and misalignment)

Detail 14: Angular offset (bend)

Detail 15: Misalignment

See point 5.5.1.3.3 Fields of application Pipe-Seal-Fix / (-Flex), here 4 Deviations in position of pipe connections.

6.5.2.1 Step 1 – Preparation

See 6.1.1 Step 1 – Cleaning and inspecting

See 6.3.1 Step 4 – Preparing the Pipe-Seal-Fix products

Please take care of the EPDM rubber: after it has been powdered with talcum according to the previously mentioned points, it must be fixed with superglue on the sleeve at four opposite points.

6.5.2.2 Step 2 – Mounting

See 6.4 Mounting the Pipe-Seal products

Figure 87: Rehabilitation with Pipe-Seal-Flex on angular offset

Short description of mounting procedure:

1. Transport the Pipe-Seal-Flex with your mounting device to the place of installation resp. the damaged spot.
2. Position the Pipe-Seal-Flex so that this is in the middle of the damage.
3. Impinge the packer with an air pressure of approx. 1.0 to 1.5 bar.
4. Then relieve the packer so that this can be positioned again.
5. Now position the packer in the middle of the rear lock and impinge the packer with the appropriate mounting pressure (see list 10.1 Survey compression pressure).
6. Then relieve the packer so that it can be positioned again.
7. Now position the packer in the middle of the front lock and impinge the packer with the appropriate mounting pressure (see list 10.1 Survey compression pressurei).
8. Then relieve the packer completely (ventilate) and remove it.

Please document the successful rehabilitation after installation!

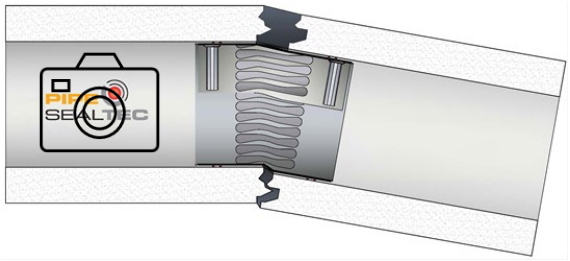

Figure 88: Pipe-Seal-Flex after mounting

After the mounting please check whether the Pipe-Seal-Flex completely closely fits to both sides of the pipe wall. Should this not be the case, please repeat the previously described points 5 - 8 (see 6.5.2.2 Step 2 – Mounting, here 5).

7 Installation „Step by Step“ – Pipe-Seal-End

7.1 Fields of application

With a Pipe-Seal-End sleeve you are able to make durable and impermeable connections of tension free and completely cured inliner systems in the old pipe or in shaft structures.

The Pipe-Seal-End sleeve has the same material properties as our products Pipe-Seal-Fix/ -Flex.

Here the sleeve can also be conically expanded to a certain extent due to the special locking mechanism (see 5.5.1.1 Locking mechanism).

Basically the Pipe-Seal-End sleeve serves as:

1. Sealing of liner systems between liner and old pipe.
2. Shaft connection – here as a pressure resistant seal between shaft, structure, old pipe and liner system.
3. See also 5.2 Pipe-Seal-End; 5.2.1 Execution

Please measure the wall thickness of the liner system beforehand and check in conformity the suitability of Pipe-Seal-End for this purpose!

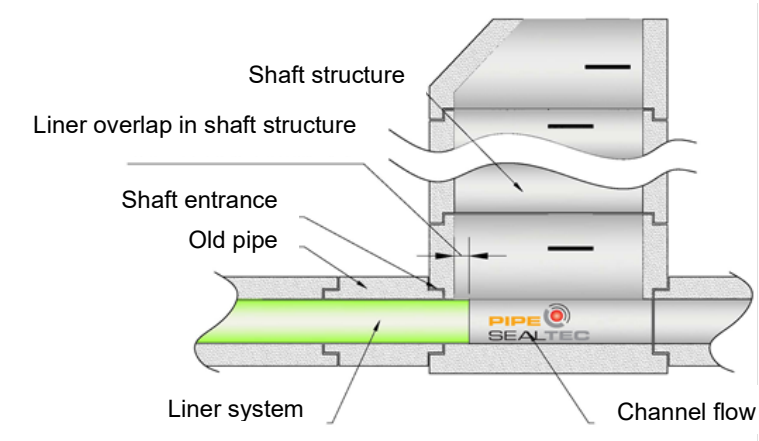

Figure 89: Scheme Liner system / Passage to shaft structure

7.2 Mounting Pipe-Seal-End

7.2.1 Step 1 – Cleaning and inspecting

See 6.1.1 Step 1 – Cleaning and inspecting

See 6.3.1 Step 4 – Preparing the Pipe-Seal-Fix products

7.2.2 Step 2 – Preparing Pipe-Seal-End

1. Receipt of goods

   a. All the products must be checked for possible damage before use!

2. The adhesive strips applied for protection during the transport are to be cut with an appropriate tool (see Figure 6: Pipe-Seal-Flex - Figure 17: Concrete corrosion) best cut in 0.5 cm minimum) as shown in the following figure.

Figure 90: Cut adhesive strip

3. EPDM rubber

   a. Before slipping the EPDM rubber over the respective Pipe-Seal products, it must be powdered with talcum. Thus the slipping over is much easier and the friction between rubber and sleeve is reduced.

Figure 91: Powder EPDM with talcum

   b. Slipping over the EPDM rubber

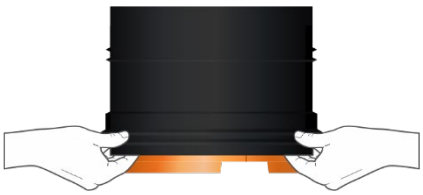

Figure 92: Slip-over the EPDM rubber seal

4. Equipment

   See also 6.2.1.1 Devices, equipment

Figure 93: Pipe-Seal Liner end packer

7.2.3 Step 3 – Mounting Pipe-Seal-End

1. Liner cut

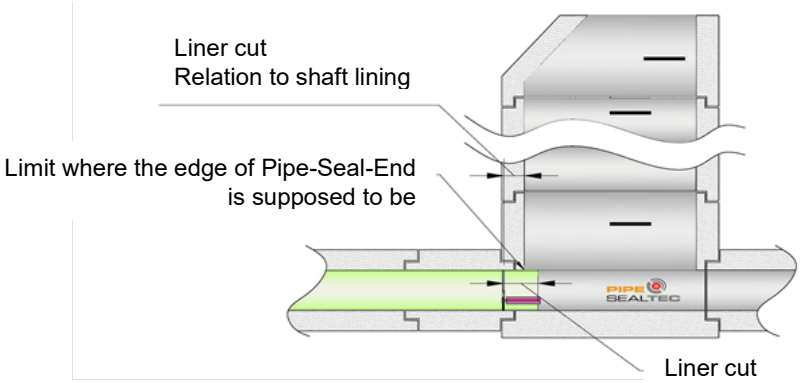

Figure 94: Making res. positioning the liner cut

Please take care not to damage the old pipe when removing the inliner.

a. Circumferential liner cut

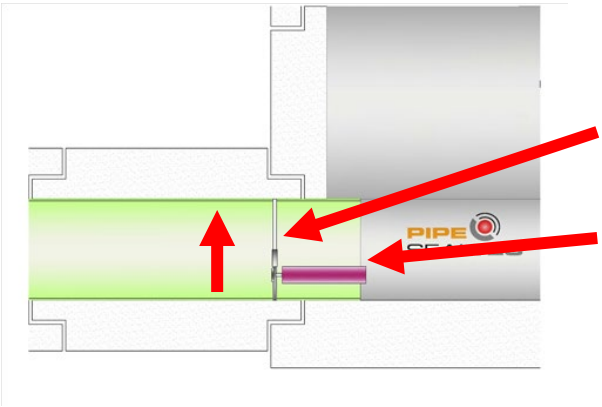

Figure 95: Circumferential liner cut

Detail 16: Circumferential liner cut

Detail 17: Suitable cutting tool

b. Longitudinal cut liner

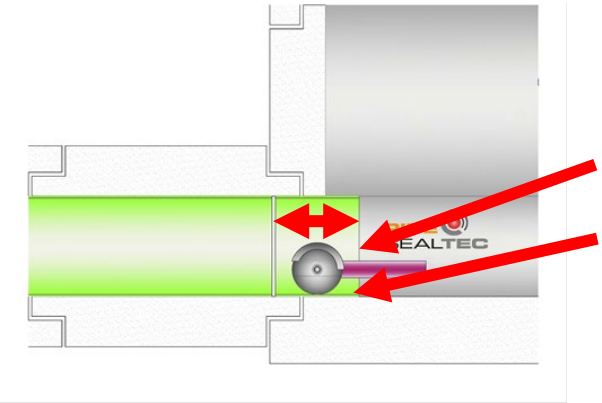

Figure 96: Longitudinal cut inliner

Detail 18: Suitable cutting tool

Detail 19: Longitudinal cut liner

After having removed the liner overlap, check whether the pipe connection does not exceed an angular offset (bend) of 1° and whether its surface is suitable for the mounting procedure!

c. Position packer and Pipe-Seal-End

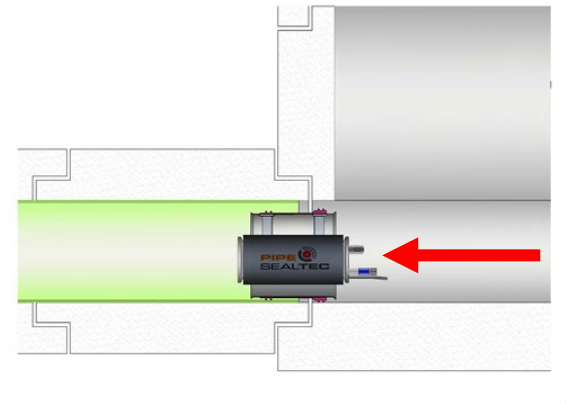

Figure 97: Positioning packer / Pipe-Seal-End

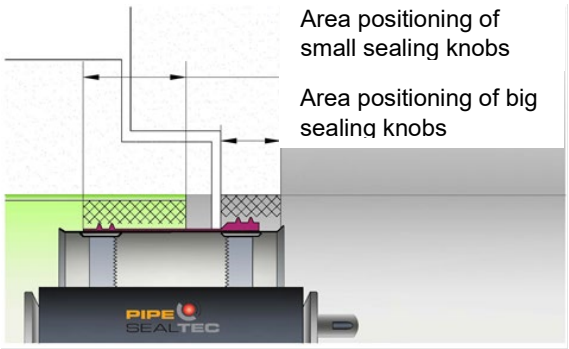

Figure 98: Positioning Pipe-Seal-End

- Position the rubber seal in a way that the heightened sealing knob area (in front), as previously described in the figure, is located just like the small sealing knob area in the area of the liner system.
- The edge of Pipe-Seal-End shall align with the edge of the structure (see Figure 95: Making res. positioning the liner cut: Making res. positioning the liner cut).
- Position the lock in the position between 1 - 2 o'clock (viewing direction from shaft into pipeline – mounting area).
- Now locate the sleeve in the pipe and apply a pressure of approx. 1.8 bar on the liner-end packer, so that the Pipe-Seal-End sleeve can fit to the existing pipe.
- Then you firmly apply the necessary pressure onto the liner end packer, according to the enclosed table.
- Relieve the liner end packer and position it in a way that maximum 1/3 of the balloon length is protruding into the shaft and impinge it with the necessary fixing pressure (see table in 10 Appendices).
- Relieve the liner end packer and position it in the middle of the rear lock and repeat the procedure as previously described in point 5.

For reasons of technical safety, NO person should be in the shaft structure during the impingement of the liner end packer with the fixing pressure!

d. Expanding the packer

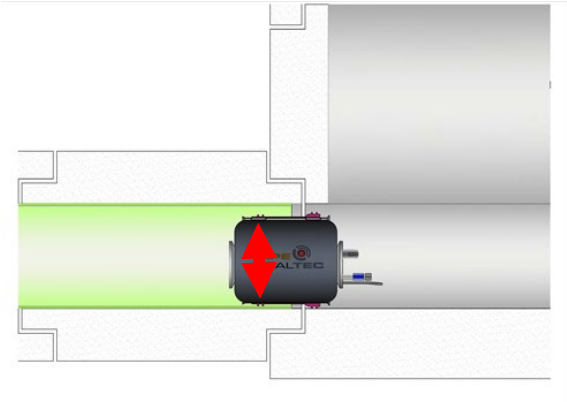

Figure 99: Expanding the packer

e. Applying the installation pressure

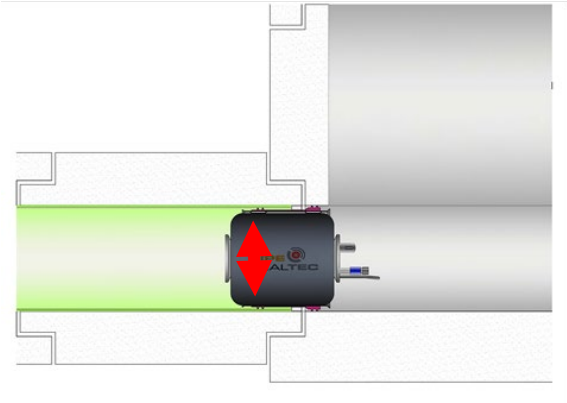

Figure 100: Apply the installation pressure

f. Pressure relief on packer and removal

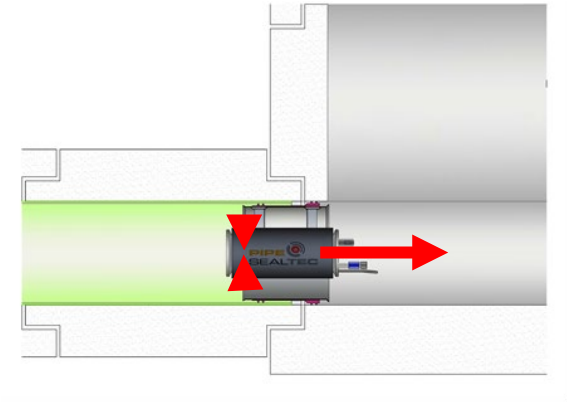

Figure 101: Pressure relief on liner-end packer

g. Successful liner connection

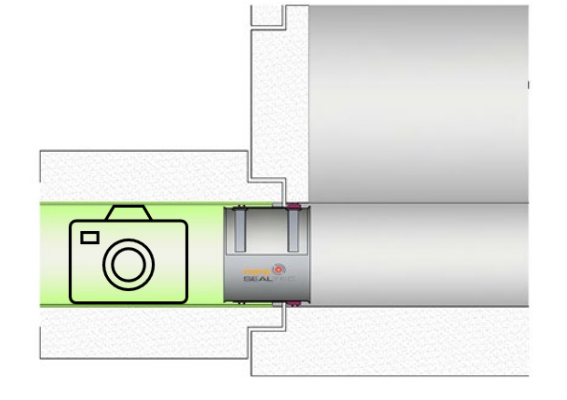

Figure 102: Liner connection with Pipe-Seal-End

Please document the successful rehabilitation after mounting!

8 Removal of Pipe-Seal products

Should there be misplacement, our Pipe-Seal sleeves can be dismounted leaving no residue.

This is realised by removing the locking mechanism.

1. Pipe-Seal-Fix/-Flex
   a. Use of milling robots
2. Pipe-Seal-End
   a. Mechanical destruction of the locking mechanism (opened by force with suitable tools)

The tension of the sleeve material and the residual tension of the EPDM rubber allow the Pipe-Seal sleeve to roll up again (to a certain extent).

Once these will have been dismounted and removed from the rehabilitation area, our Pipe-Seal sleeves can no longer be used.

9 Special applications

9.1 Pipe-Seal sleeves in tight pipe systems

Due to the excellent sealing properties of our Pipe-Seal sleeves, a pressure build-up may be caused in tight pipe systems in the area between the sealing knobs when installing the Pipe-Seal sleeve. The effect usually takes place in pipe systems with very smooth surfaces and absolutely tight pipe connections.

You avoid the possible pressure build-up by cutting the EPDM rubber before its installation in the area between the sealing knobs.

The arising pressure can thus be reduced resp. escape.

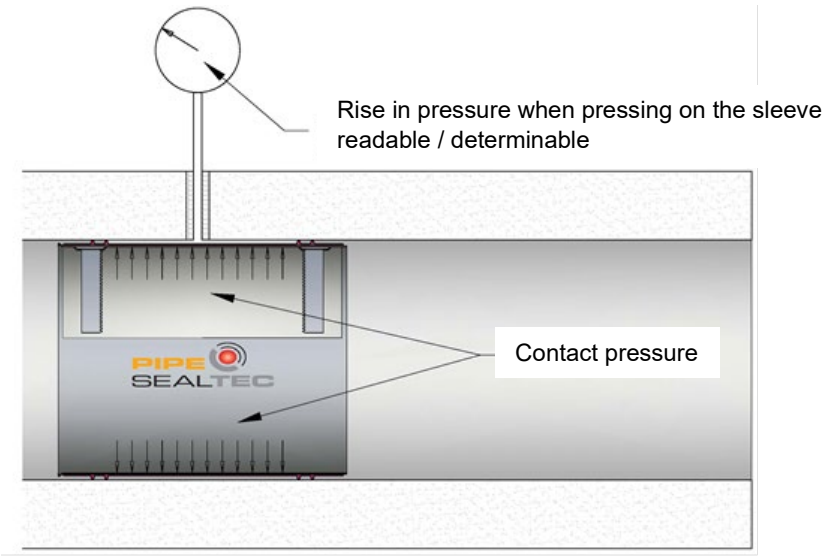

Figure 103: Possible pressure build-up between sealing knobs

9.2 Pipe-Seal sleeves in case of root penetration

In the following procedure we show you possibilities with which you can rehabilitate demanding damage situations.

Here a successful rehabilitation depends on the existing limiting factors and cannot be generally guaranteed.

9.2.1 Step 1 – Preparation

1. Proceed as described under point:
   a. See the following points

   - 6.1.1 Step 1 – Cleaning and inspecting
   - 6.1.2 Step 2 – Preparation
   - 6.3.1 Step 4 – Preparing the Pipe-Seal-Fix products

2. Owing to circumstances it may become necessary to previously remove existing roots with another suitable rehabilitation system (e.g. milling robot).

3. Before the subsequent mounting apply in the area between the sealing knobs (on the EPDM rubber) highly alkaline and mineral Flex glue up to the maximum height of the sealing knobs. In doing so, at least 5 cm on both sides between the sealing knobs and the Flex glue should not be coated. It is guaranteed that the sealing properties will not be impaired.

   We recommend a product with good adhesive properties so that the material does not tear and/ or get lost upon expansion.

Figure 104: Applying the Flex glue

The Pipe-Seal sleeves are prepared as previously described.

9.2.2 Step 2 – Mounting

1. Proceed as described under point:
   a. See the following points
      - 6.4.1 Step 5 – Mounting Pipe-Seal-Fix

9.3 Pipe-Seal sleeves in corroded reinforcements of reinforced concrete pipes

Generally prepare the ground of the old pipe and the damage to be worked in a way that a smooth sealing surface is produced in order to ensure resp. produce the excellent sealing properties of the Pipe-Seal sleeves.

9.3.1 Step 1 – Preparation

1. Proceed as described under point:
   a. See the following points

- 6.1.1 Step 1 – Cleaning and inspecting
- 6.1.2 Step 2 – Preparation
- 6.3.1 Step 4 – Preparing the Pipe-Seal-Fix products

2. Owing to circumstances it may become necessary to work existing roots beforehand with a suitable rehabilitation system (e.g. milling robot).

9.3.2 Step 2 – Mounting

1. Proceed as described under point:
   a. See the following point
   - 6.4.1 Step 5 – Mounting Pipe-Seal-Fix

9.4 Pipe-Seal sleeves for heavy water ingress

In case of heavy water ingress it is possible to work with water blocking tape or a one-component sealing compound on a polyurethane base.

9.5 Pipe-Seal sleeves in plastic pipes

Please check beforehand the dimensions of the plastic pipes you have to work on (see 6.1 Preparing the areas to be worked).

Please use our technical data sheet which we enclose in the appendix (see 10.2 Technical data sheet Pipe-Seal-Fix/-Flex).

Please check the dimensions of the plastic pipes to work on with the available roll-up and maximum stretching size.

Eventually existing deformation in the rehabilitation area can be levelled with our Pipe-Seal sleeves.

10 Appendices

10.1 Survey compression pressure

Pipe-Seal-Fix/-Flex				
Pipe material	**Damage**	**Nominal width DN in mm**	**Contact pressure in bar**	**Installation pressure in bar (Compression pressure)**
PVC, concrete pipes, asbestos-cement and vitrified clay pipes	Longitudinal cracks	150	3,0 - 3,5	2,5 - 3,0
		188		
		200		3,0 - 3,5
		250 - 800		2,7 - 3,0
	Transverse cracks, leaky sockets	188		4,0 - 4,5
		200		3,5 - 4,0
		250 - 800		3,0 - 3,5
GRP (PE,PP), reinforced concrete and cast iron pipes	All kinds of damage	188		4,5 - 4,5
		200		3,0 - 3,5
		250 - 800		3,0 - 3,5
Pipe-Seal-End				
		Nominal width DN in mm	**Contact pressure in bar**	**Installation pressure in bar (Compression pressure)**
		188	max. 0,5	4,0 - 4,5
		200		4,0 - 4,5
		225 - 400		3,0 - 4,5
		450 - 600		3,0 - 4,0
		700 - 800	max. 0,5	3,5 - 4,0

10.2 Technical data sheet Pipe-Seal-Fix/-Flex

Pipe-Seal sleeve DN	Rubber seal DN	Sleeve length	Stainless steel sleeve		Suitable for pipes		Stainless steel sleeve		EPDM rubber seal			Displacement packers	Wheelset track extension	Total length	Length of balloon	Balloon Ø	Wheelset Ø
			Roll-up size	Extended dimension max.	Internal pipe diameter		Max. sealing zone for single displacement	Metal sheet thickness	Thickness rubber surface	Height sealing burls	Rubber thickness incl. sealing burls						
					Min.	Max. (without compression)											
mm	mm	mm	mm	mm	mm	mm	mm	mm	mm	mm	mm						
150	150	300	119	149	131	157	200	1	2	4	6	150-200	150 & 150	782	460	138	58
188	188	420	151	188	166	199	300	1,25	2,5	5	7,5	150-200	188 & 188	782	460	138	75
200	200	420	160,5	201	176	212	300	1,25	2,5	5	7,5	200-300	200 & /200	782	460	138	75
210	200	420	170	212	185	223	300	1,25	2,5	5	7,5	200-300	210 & 210	782	460	138	75
225	225	420	182	227	197	238	300	1,25	2,5	5	7,5	200-300	225+SV300 & 225	782	460	138 & 157	68 & 67
240	240	420	194	242	209	253	300	1,25	2,5	5	7,5	200-300	236+SV300 & 240	782	460	138 & 157	79 & 75
250	250	420	202	252	217	263	300	1,25	2,5	5	7,5	200-300 & 250-300	250 & 250	782	460	138 & 157	125 & 75
276	276	420	220	278	235	289	300	1,25	2,5	5	7,5	200-300 & 250-300	275+SV300 & 275	782	460	138 & 157	100 & 100
286	286	420	229	288	244	299	300	1,25	2,5	5	7,5	200-300 & 250-300	280+SV300 & 280	782	460	138 & 157	100 & 100
300	300	420	243	305	258	316	300	1,25	2,5	5	7,5	200-300 & 250-300	250+SV300 & 300	782	460	138 & 157	125 & 125
315	315	420	253	315	268	326	300	1,25	2,5	5	7,5	200-300 & 250-300	250+SV300 & 300	782	460	138 & 157	125 & 125
330	330	420	270	335	285	346	300	1,25	2,5	5	7,5	200-300	330	782	460	138	125
350	350	420	290	355	305	366	300	1,25	2,5	5	7,5	350-500	350	800	490	269	75
380	380	420	300	377	321	394	300	1,5	2,5	8	10,5	350-500	380	800	490	269	100
400	400	420	327	408	348	425	300	1,25	2,5	8	10,5	350-500	400	800	490	269	125
400	400	420	327	408	348	425	300	1,5	2,5	8	10,5	350-500	400	800	490	269	125
450	450	420	374	456	395	473	300	1,5	2,5	8	10,5	350-500	400+SV450	800	490	269	125
480	480	420	388	480	409	497	300	1,5	2,5	8	10,5	350-500	480+SV500	800	490	269	125
500	500	420	424	506	445	523	300	1,5	2,5	8	10,5	350-500 & 500-600	400+SV500 & 500	800 & 863	490 & 540	269 & 397	125
530	530	420	448	530	469	547	300	1,5	2,5	8	10,5	500-600	530	863	540	397	125
580	580	500	455	580	476	597	390	2	2,5	8	10,5	500-600	500+SV600 & 600	863	540	397	125
600	600	420	515	609	536	626	300	1,5	2,5	8	10,5	500-600 & 600-700	500+SV600 & 600	863 & 888	540	397 & 462	125 & 150
600	600	500	515	609	536	626	390	2	2,5	8	10,5	500-600 & 600-700	500+SV600 & 600	863 & 888	540	397 & 462	125 & 150
650	650	500	560	659	581	676	390	2	2,5	8	10,5	600-700	650	888	540	462	125
700	700	500	560	713	581	730	390	2	2,5	8	10,5	600-700 & 700-800	600+SV700 & 700	888	540	462 & 542	150 & 150
750	750	500	595	758	616	775	390	2	2,5	8	10,5	700-800	SV750	888	540	542	125
800	800	500	697	814	718	831	390	2	2,5	8	10,5	700-800	700+SV800	888	540	542	150

Producible as Pipe-Seal-Fix
Producible as Pipe-Seal-Fix and -Flex

Note
1. In case of single or series offset, keep flanging in mind.
2. It is no longer possible to insert the Pipe-Seal-Fix bigger than DN 750 through the manhole cone!

10.3 Technical data sheet Pipe-Seal-End

Pipe-Seal sleeve DN	Rubber seal DN	Sleeve length	Stainless steel sleeve		Suitable for pipes		Liner cutback	Sheet thickness	EPDM rubber seal			Liner thickness	
			Roll dimension	Max. tensioning dimension	Min. pipe interior (liner) diameter	Max. pipe interior diameter (without compression)			Rubber surface thickness	Rubber thickness incl. seal knobs, liner	Rubber thickness incl. seal knobs, old pipe	Min.	Max.
mm	mm	mm	mm	mm	mm	mm	mm	mm	mm	mm	mm	mm	mm
150	150	250	119	149	131	169	100-140	1	2	6	12	3	10
188	188	250	151	188	163	208	100-140	1,25	2	6	12	3	10
200	200	250	160,5	201	173	221	100-140	1,25	2	6	12	3	10
210	200	250	170	212	182	232	100-140	1,25	2	6	12	3	10
225	225	250	182	227	194	247	100-140	1,25	2	6	12	3	10
240	240	250	194	242	206	262	100-140	1,25	2	6	12	3	10
250	250	250	202	252	214	272	100-140	1,25	2	6	12	3	10
276	276	250	220	278	232	298	100-140	1,25	2	6	12	3	10
286	286	250	229	288	241	308	100-140	1,25	2	6	12	3	10
300	300	250	243	305	255	325	100-140	1,25	2	6	12	3	10
315	315	250	253	315	265	335	100-140	1,25	2	6	12	3	10
330	330	250	270	335	282	355	100-140	1,25	2	6	12	3	10
350	350	250	290	355	302	375	100-140	1,5	2	6	12	3	10
380	380	250	300	377	312	397	100-140	1,5	2	6	12	3	10
400	400	250	327	408	339	428	100-140	1,5	2	6	12	3	10
450	450	250	374	456	386	476	100-140	1,5	2	6	12	3	10
480	480	250	388	480	400	500	100-140	1,5	2	6	12	3	10
500	500	250	424	506	436	526	100-140	1,5	2	6	12	3	10
530	530	250	448	530	460	550	100-140	1,5	2	6	12	3	10
580	580	300	455	580	467	600	120-160	2	2	6	12	3	12
600	600	300	515	609	527	629	120-160	2	2	6	12	3	12
650	650	300	560	659	572	679	120-160	2	2	6	12	3	12
700	700	300	560	713	572	733	120-160	2	2	6	12	3	12
750	750	300	595	758	607	778	120-160	2	2	6	12	3	12
800	800	300	697	814	709	834	120-160	2	2	6	12	3	12

Note

1. Always install the smaller flanged edge in the direction of the liner, and the larger flanged edge in the direction of the old pipe.
2. It is no longer possible to insert the Pipe-Seal-End bigger than DN 750 through the manhole cone!

List of figures

Table of details